JEFFREY D & JEANETTE E GIBBS
337 W WOODLAND RIDGE

LOT 373 NEW VALMEYER PHASE 6

VALMEYER IL 62295
Site Address: 000337 W WOODLAND RIDGE

BLDG #	1	
Style/Stories	1.0	One Story
Quality/Design	C	C-Average
Building Use	0100	Single Fami
Exterior Wall	F	Frame
WALL %	060	060%
Exterior Wall 1	M	Masonry
WALL 1%	040	040%
Crawl Sp. Adj		
Slab Adjustment		
Basement		
Combination		
Attic Area		
Heat/AC Adj	AC	Central Air
Comb Ht/AC Adj		
Fireplace	00	N/A
Extra Fireplace	00	N/A
Res Fixtures	0009	09 Fixtures
Garage	F	Frame Garag
Integral Garage		
Remodeling Adj	01	No Remodeli
Actual Year Blt	2003	
Effect Year Blt	2003	
Cond/Desir/Util	A	Res CDU - A
Township Multpl	06	TOWNSHIP #0
Funct. Obs. %		
Economic Obs. %		
Observed Cond %		
Obs. Cond. Code		
Combination A		
Comb A Ht/AC		
Unfin Low/Level		
Full Basement	F	Full Baseme
# Of Bedrooms	03	Three Bedro
Sq.Ft.Grd Area	1854	

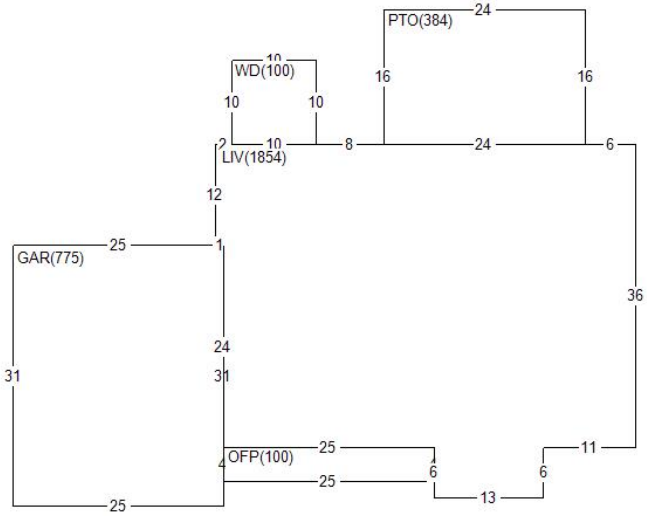

Land Value	26,760
Misc Value	13,130
Bldg Value	191,480
Total Value	231,370
Value By	CAMA
RCN	215,143
Pct Good	0.8900
Obsol/Observed	0.0000
Building Value	191,480

DOCUMENT #	DATE	QS	SALE PRICE
*267859	1202	Q	29,070

PERMIT NO	TYPE	DATE	AMOUNT
R1-02-44	00	0503	
R1-02-44	01	1202	

Appraiser KS K. Sondag
Appr Date 07/05/22
Use Code 0040 Imp Res
NBHD 62000.10 VLMYR 1.0 STORY
L100 M100 B144

AREA	FLAT	EFF%	E/AREA	ACT%	A/AREA	EA/AA	HEATED
CONDR	704	1.00	704	1.00	704	704	
OFP	100	1.00	100	1.00	100	100	
GAR	775	1.00	775	1.00	775	775	
WD	100	1.00	100	1.00	100	100	
LIV	1854	1.00	1854	1.00	1854	1854	1854
PTO	384	1.00	384	1.00	384	384	

MISC	BLDG	CODE	DESC	LENGTH	WIDTH	UNITS	ADJ PRICE	EYB	DT	PCT	ADJUSTMENT	VALUE
1	1	WD	Wood Deck	10.00	10.00	100.00	19.35	2003	A	11.00	1.00	1,720
2	1	OFP	Open Frame Porch	4.00	25.00	100.00	27.00	2003	A	11.00	1.00	2,400
3	1	CONDR	Concrete Drivewa	22.00	32.00	704.00	3.65	2003	A	11.00	1.00	2,290
4	1	BRVEN	Brick Veneer	.00	.00	144.00	14.65	2003	A	11.00	1.00	1,880
5	1	DORM	Dormer	.00	.00	2.00	1850.00	2003	OD	0.00	1.00	3,700
6	1	PTO	Concrete Patio	24.00	16.00	384.00	2.99	2019	A	1.00	.82	1,140

LAND	LUSE	DESC	ZONING	UNITS	TP	PRICE	ADJUSTMENT CODE/FACTOR				VALUE
1	6200	VALMEYER	VR1	1.00	ST	26760.00	TW 1.00	.00	.00	.00	26,760