REX D & CAROLE A HANCOCK
125 WEST WOODLAND RIDGE

LOT 189 AMENDED PHASE 3
RESUBDIVISION NEW VALMEYER

VALMEYER IL 62295
Site Address: 000125 W WOODLAND RIDGE

BLDG # 1

Style/Stories	1.0	One Story
Quality/Design	C	C-Average
Building Use	0100	Single Fami
Exterior Wall	F	Frame
WALL %	100	100%
Exterior Wall 1		
WALL 1%	000	N/A
Crawl Sp. Adj		
Slab Adjustment		
Basement	RC	C-Rec Room
Combination		
Attic Area		
Heat/AC Adj	AC	Central Air
Comb Ht/AC Adj		
Fireplace	31	DirectVent
Extra Fireplace	00	N/A
Res Fixtures	0010	10 Fixtures
Garage	F	Frame Garag
Integral Garage		
Remodeling Adj	01	No Remodeli
Actual Year Blt	2003	
Effect Year Blt	2003	
Cond/Desir/Util	A	Res CDU - A
Township Multpl	09	TOWNSHIP #0
Funct. Obs. %		
Economic Obs. %		
Observed Cond %		
Obs. Cond. Code		
Combination A		
Comb A Ht/AC		
Unfin Low/Level		
Full Basement	F	Full Baseme
# Of Bedrooms	03	Three Bedro
Sq.Ft.Grd Area	1764	

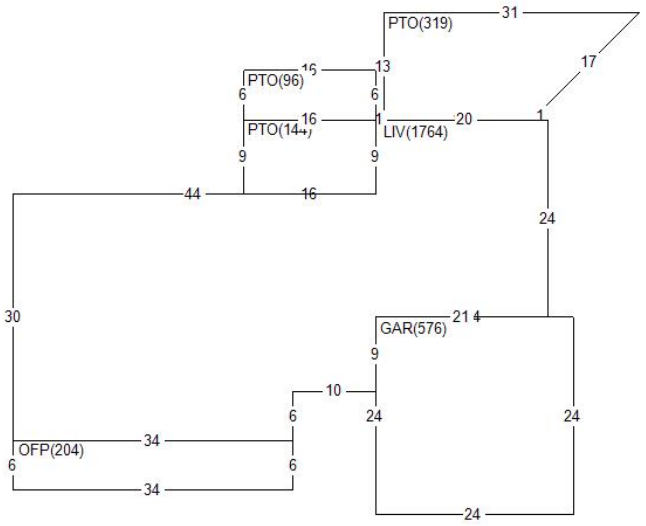

Land Value	26,760
Misc Value	9,910
Bldg Value	157,430
Total Value	194,100
Value By CAMA	
RCN	174,927
Pct Good	0.9000
Obsol/Observed	0.0000
Building Value	157,430

DOCUMENT #	DATE	QS	SALE PRICE
364256	0413	U	170,000
351642	1111	U	165,000
	0502	Q	25,641

PERMIT NO	TYPE	DATE	AMOUNT
R1-03-06	01	0203	

Appraiser KS K. Sondag
Appr Date 07/21/22
Use Code 0040 Imp Res
NBHD 62000.10 VLMYR 1.0 STORY
L100 M100 B118

AREA	FLAT	EFF%	E/AREA	ACT%	A/AREA	EA/AA	HEATED
OFP	204	1.00	204	1.00	204	204	
GAR	576	1.00	576	1.00	576	576	
PTO	559	1.00	559	1.00	559	559	
LIV	1764	1.00	1764	1.00	1764	1764	1764
CONDR	1158	1.00	1158	1.00	1158	1158	
BSMR	882	1.00	882	1.00	882	882	

MISC	BLDG	CODE	DESC	LENGTH	WIDTH	UNITS	ADJ PRICE	EYB	DT	PCT	ADJUSTMENT	VALUE
1	1	OFP	Open Frame Porch	6.00	34.00	204.00	22.83	2003	A	10.00	1.00	4,190
2	1	PTO	Concrete Patio	9.00	16.00	144.00	3.65	2003	A	10.00	1.00	470
3	1	PTO	Concrete Patio	.00	.00	319.00	3.65	2003	A	10.00	1.00	1,050
4	1	CONDR	Concrete Drivewa	39.00	24.00	936.00	3.65	2003	A	10.00	1.00	3,070
5	1	PTO	Concrete Patio	6.00	16.00	96.00	3.65	2013	A	3.00	1.00	340
6	1	CONDR	Concrete Drivewa	37.00	6.00	222.00	3.65	2013	A	3.00	1.00	790

LAND	LUSE	DESC	ZONING	UNITS	TP	PRICE	ADJUSTMENT CODE/FACTOR				VALUE
1	6200	VALMEYER	VR1	1.00	ST	26760.00	TW 1.00	.00	.00	.00	26,760