WILLIAM W & JUDITH A TIPTON
129 W HUNTERS RIDGE

LOT 149 NEW VALMEYER PHASE 2

VALMEYER IL 62295
Site Address: 000129 W HUNTERS RIDGE

BLDG #	1	
Style/Stories	1.0	One Story
Quality/Design	C	C-Average
Building Use	0100	Single Fami
Exterior Wall	F	Frame
WALL %	100	100%
Exterior Wall 1		
WALL 1%	000	N/A
Crawl Sp. Adj		
Slab Adjustment		
Basement		
Combination		
Attic Area		
Heat/AC Adj	AC	Central Air
Comb Ht/AC Adj		
Fireplace	00	N/A
Extra Fireplace	00	N/A
Res Fixtures	0008	08 Fixtures
Garage	F	Frame Garag
Integral Garage		
Remodeling Adj	01	No Remodeli
Actual Year Blt	1995	
Effect Year Blt	1995	
Cond/Desir/Util	A	Res CDU - A
Township Multpl	09	TOWNSHIP #0
Funct. Obs. %	000000	
Economic Obs. %	000000	
Observed Cond %	000000	
Obs. Cond. Code		
Combination A		
Comb A Ht/AC		
Unfin Low/Level		
Full Basement	F	Full Baseme
# Of Bedrooms	02	Two Bedroom
Sq.Ft.Grd Area	1428	

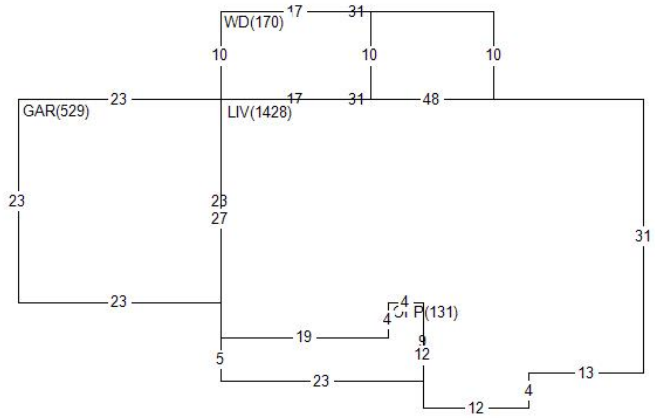

Land Value	26,760
Misc Value	9,950
Bldg Value	161,020
Total Value	197,730
Value By	CAMA
RCN	198,790
Pct Good	0.8100
Obsol/Observed	0.0000
Building Value	161,020

DOCUMENT #	DATE	QS	SALE PRICE
	0994	U	6,086

PERMIT NO	TYPE	DATE	AMOUNT
R1-94-28	01	1094	

Appraiser KS K. Sondag
Appr Date 07/25/22
Use Code 0040 Imp Res
NBHD 62000.10 VLMYR 1.0 STORY
L100 M100 B169

AREA	FLAT	EFF%	E/AREA	ACT%	A/AREA	EA/AA	HEATED
OFP	131	1.00	131	1.00	131	131	
GAR	529	1.00	529	1.00	529	529	
PTO	310	1.00	310	1.00	310	310	
WD	170	1.00	170	1.00	170	170	
LIV	1428	1.00	1428	1.00	1428	1428	1428
CONDR	1349	1.00	1349	1.00	1349	1349	

MISC	BLDG	CODE	DESC	LENGTH	WIDTH	UNITS	ADJ PRICE	EYB	DT	PCT	ADJUSTMENT	VALUE
1	1	WD	Wood Deck	10.00	17.00	170.00	19.35	1995	F	27.00	1.00	2,400
2	1	PTO	Concrete Patio	10.00	31.00	310.00	3.65	1995	A	19.00	1.00	920
4	1	CONDR	Concrete Drivewa	53.00	23.00	1219.00	3.65	1995	A	19.00	1.00	3,600
5	1	OFP	Open Frame Porch	.00	.00	131.00	24.91	1995	A	19.00	1.00	2,640
6	1	CONDR	Concrete Drivewa	10.00	13.00	130.00	3.65	1995	A	19.00	1.00	390

LAND	LUSE	DESC	ZONING	UNITS	TP	PRICE	ADJUSTMENT CODE/FACTOR					VALUE
1	6200	VALMEYER	VR1	1.00	ST	26760.00	.00	.00	.00	TW	1.00	26,760