 Req By: DAWN 12/15/25 12:42:00 MONROE COUNTY RESIDENTIAL

LOT 19 FOX RUN ESTATES PHASE 1

DOUGLAS A& PATRICIA A FRY
2387 LAKE SHORE DR
COLUMBIA IL 62236

ROOF MOUNTED SOLAR

BLDG # 1 Site Address: 002387 LAKE SHORE DR

Style/Stories	1.0	One Story
Quality/Design	C	C-Average
Building Use	0100	Single Fami
Exterior Wall	F	Frame
WALL %	080	080%
Exterior Wall 1	M	Masonry
WALL 1%	020	020%
Crawl Sp. Adj		
Slab Adjustment		
Basement	LC	C-Living Qt
Combination		
Attic Area		
Heat/AC Adj	AC	Central Air
Comb Ht/AC Adj		
Fireplace	00	N/A
Extra Fireplace	00	N/A
Res Fixtures	0011	11 Fixtures
Garage	F	Frame Garag
Integral Garage		
Remodeling Adj	01	No Remodeli
Actual Year Blt	2016	
Effect Year Blt	2016	
Cond/Desir/Util	A	Res CDU - A
Township Multpl	04	TOWNSHIP #0
Funct. Obs. %	000000	
Economic Obs. %	000000	
Observed Cond %	000000	
Obs. Cond. Code		
Combination A		
Comb A Ht/AC		
Unfin Low/Level		
Full Basement	F	Full Baseme
# Of Bedrooms	03	Three Bedro
Sq.Ft.Grd Area	1816	

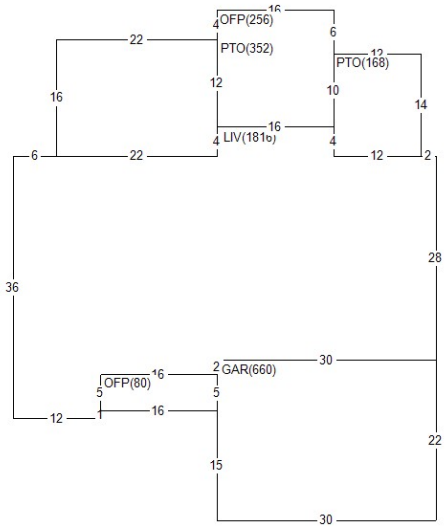

Land Value	59,470
Misc Value	18,480
Bldg Value	345,530
Total Value	423,480
Value By CAMA	
RCN	356,215
Pct Good	0.9700
Obsol/Observed	0.0000
Building Value	345,530

DOCUMENT #	DATE	QS	SALE PRICE
410504	0820	U	
387112	1216	Q	356,421
381581	0216	Q	53,000

PERMIT NO	TYPE	DATE	AMOUNT
BPR25-0672	40	0625	
BP-16-101	01	0616	

Appraiser AS A. Schwar
Appr Date 09/03/20
Use Code 0040 Imp Res
NBHD 411.39 FOX RUN EST 1.0
L100 M100 B240

AREA	FLAT	EFF%	E/AREA	ACT%	A/AREA	EA/AA	HEATED
LIV	1816	1.00	1816	1.00	1816	1816	1816
GAR	660	1.00	660	1.00	660	660	
OFP	336	1.00	336	1.00	336	336	
PTO	520	1.00	520	1.00	520	520	
CONDR	1296	1.00	1296	1.00	1296	1296	
BSML	244	1.00	244	1.00	244	244	

MISC	BLDG	CODE	DESC	LENGTH	WIDTH	UNITS	ADJ PRICE	EYB	DT	PCT	ADJUSTMENT	VALUE
1	1	BRVEN	Brick Veneer	.00	.00	273.00	14.65	2016	A	3.00	1.00	3,880
2	1	PTO	Concrete Patio	16.00	22.00	352.00	3.65	2016	A	3.00	1.00	1,250
3	1	OFP	Open Frame Porch	16.00	16.00	256.00	23.68	2016	A	3.00	1.00	5,880
4	1	PTO	Concrete Patio	14.00	12.00	168.00	3.65	2016	A	3.00	1.00	600
5	1	OFP	Open Frame Porch	5.00	16.00	80.00	29.38	2016	A	3.00	1.00	2,280
6	1	CONDR	Concrete Drivewa	48.00	27.00	1296.00	3.65	2016	A	3.00	1.00	4,590

LAND	LUSE	DESC	ZONING	UNITS	TP	PRICE	ADJUSTMENT CODE/FACTOR				VALUE
1	0401	COLUMBIA LAND #1	CR5	16117.20	S	3.69	TW 1.00	.00	.00	.00	59,470