 Req By: KRIS_K 05/30/23 10:12:56 MONROE COUNTY RESIDENTIAL

GAIL L & CORY J INMAN

LOT 223 NEW VALMEYER PHASE 4 101 MILLER CT

VALMEYER IL 62295

BLDG # 1 Site Address: 000101 MILLER CT

Style/Stories	1.0	One Story
Quality/Design	C	C-Average
Building Use	0100	Single Fami
Exterior Wall	F	Frame
WALL %	100	100%
Exterior Wall 1		
WALL 1%	000	N/A
Crawl Sp. Adj		
Slab Adjustment		
Basement		
Combination		
Attic Area		
Heat/AC Adj	AC	Central Air
Comb Ht/AC Adj		
Fireplace	00	N/A
Extra Fireplace	00	N/A
Res Fixtures	0008	08 Fixtures
Garage	F	Frame Garag
Integral Garage		
Remodeling Adj	01	No Remodeli
Actual Year Blt	2004	
Effect Year Blt	2004	
Cond/Desir/Util	A	Res CDU - A
Township Multpl	06	TOWNSHIP #0
Funct. Obs. %		
Economic Obs. %		
Observed Cond %		
Obs. Cond. Code		
Combination A		
Comb A Ht/AC		
Unfin Low/Level		
Full Basement	F	Full Baseme
# Of Bedrooms	03	Three Bedro
Sq.Ft.Grd Area	1617	

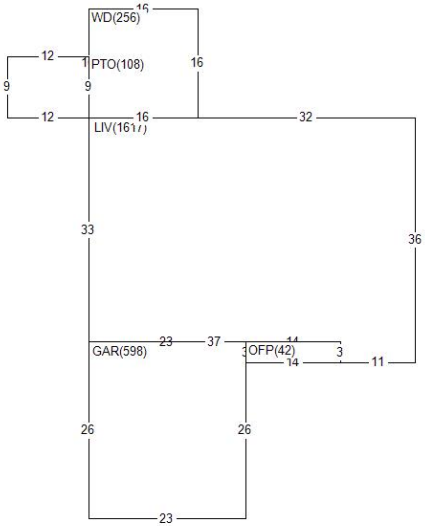

Land Value	26,760
Misc Value	16,670
Bldg Value	137,890
Total Value	181,320
Value By	CAMA
RCN	151,526
Pct Good	0.9100
Obsol/Observed	0.0000
Building Value	137,890

DOCUMENT #	DATE	QS	SALE PRICE
383811	0616	07	134,000
289403	0704	Q	150,686
286013	0404	U	35,261

PERMIT NO	TYPE	DATE	AMOUNT
R1-04-12	01	0304	

Appraiser KS K. Sondag

Appr Date 07/07/22

Use Code 0040 Imp Res

NBHD 62000.10 VLMYR 1.0 STORY L100 M100 B118

AREA	FLAT	EFF%	E/AREA	ACT%	A/AREA	EA/AA	HEATED
OFP	42	1.00	42	1.00	42	42	
GAR	598	1.00	598	1.00	598	598	
LIV	1617	1.00	1617	1.00	1617	1617	1617
CONDR	648	1.00	648	1.00	648	648	
WD	256	1.00	256	1.00	256	256	
PTO	808	1.00	808	1.00	808	808	

MISC	BLDG	CODE	DESC	LENGTH	WIDTH	UNITS	ADJ PRICE	EYB	DT	PCT	ADJUSTMENT	VALUE
1	1	BRVEN	Brick Veneer	.00	.00	384.00	14.65	2004	A	9.00	1.00	5,120
2	1	OFP	Open Frame Porch	3.00	14.00	42.00	39.25	2004	A	9.00	1.00	1,500
3	1	CONDR	Concrete Drivewa	36.00	18.00	648.00	3.65	2004	A	9.00	1.00	2,150
4	1	WD	Wood Deck	16.00	16.00	256.00	19.35	2021	A	0.00	1.00	4,950
5	1	PTO	Concrete Patio	35.00	20.00	700.00	3.65	2021	A	0.00	1.00	2,560
6	1	PTO	Concrete Patio	12.00	9.00	108.00	3.65	2021	A	0.00	1.00	390

LAND	LUSE	DESC	ZONING	UNITS	TP	PRICE	ADJUSTMENT CODE/FACTOR				VALUE
1	6200	VALMEYER	VR1	1.00	ST	26760.00	TW 1.00	.00	.00	.00	26,760